BCNET ANNUAL HIGHER EDUCATION IT CONFERENCE

LEARN
ENGAGE
SHARE

Simplify your Campus Network Connections with a Cloud based Virtual Router

Toby Wong – Sr. Network Analyst, Network Engineering + Planning @ BCNET
Steve Rosco – Sr. Manager, IT Infrastructure @ UBC
Jim Anderson – Network Administrator, IT Technology Services @ KPU
Alexander Naumov – Team Lead, IT Networks @ UFV

BCNET
Conference 2016

Topics

1. What is the Virtual Router service?
2. University of British Columbia Okanagan (UBCO)
3. University of the Fraser Valley (UFV)
4. Kwantlen Polytechnic University (KPU)

WHAT IS THE VIRTUAL ROUTER SERVICE?

VR description

- BCNET Virtual Router is a cloud-based carrier grade service - Insfrastructure as a Service (IaaS)
- designed for clients to access Canada's National Research and Education Network (NREN)
- connect up to other BCNET Network Services such as Internet Transit and Local Peering
- save on pricey border router hardware
- leverage BCNET technical network expertise

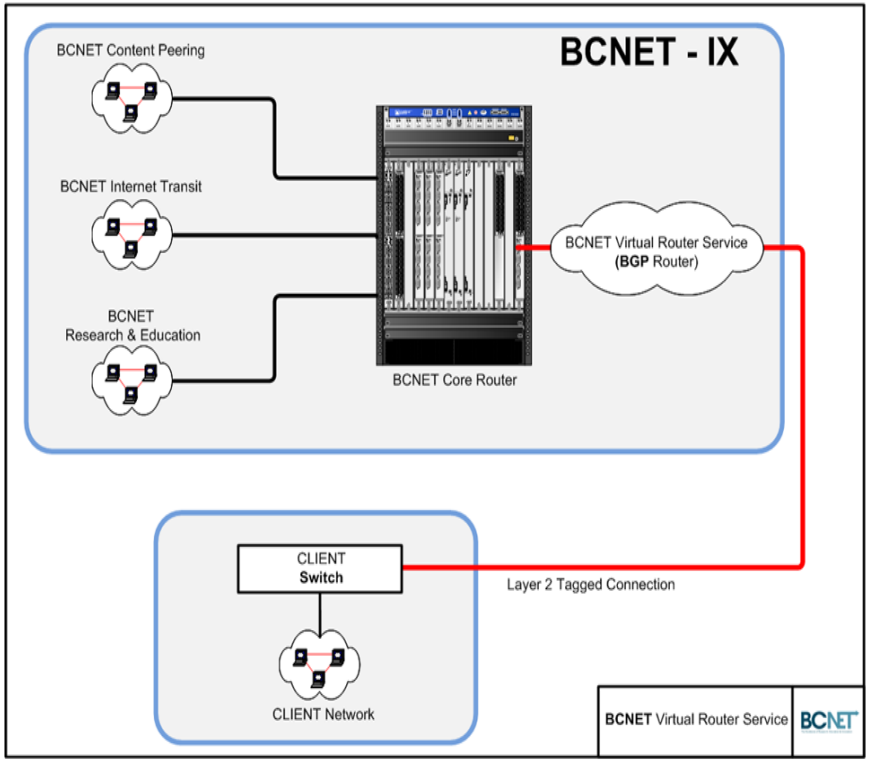

VR features

- platform using Service Provider class router -- Juniper MX series
- redundant power supplies, routing engines, system control boards
- uses JUNOS operating system
- supports 100G, 10G, 1G, 100M interfaces
- supports both IPv4 and IPv6
- supports static, OSPF, IS-IS and BGP routing protocols

VR benefits

- online documentation – FAQ, screencasts, IOS to JUNOS "translation" tables
- interactive training sessions
- client portal to view network statistics
- hardware maintained by BCNET network engineering staff
- router configuration backed up hourly
- 24/7/365 Network Operation Centre (NOC) monitoring and support

VR access

- read/write privileges via SSH
- can monitor router using SNMP

VR commands

- configuration and operational mode
- show interface statistics
- view bridging table
- view arp table
- view routing protocol status
- show route
- ping
- traceroute

VR service restrictions

Client cannot perform the following commands but can be done via the BCNET Network Engineering team upon request.

- restore configuration through JUNOS "rollback"
- reboot the router
- downgrade/upgrade router software
- add new physical interfaces

VR typical deployment

- dark fibre or managed ethernet circuits interconnect between BCNET Transit Exchange and client campuses
- VLAN's terminate directly on the VR or passed through to a main campus head-end
- interior routing using static and/or OSPF routing
- exterior routing using BGP to connect up to BCNET routing instances (Internet Transit, Local Peering and Advanced Research Network)

UNIVERSITY OF BRITISH COLUMBIA OKANAGAN

BCNET
Conference 2016

Overall design

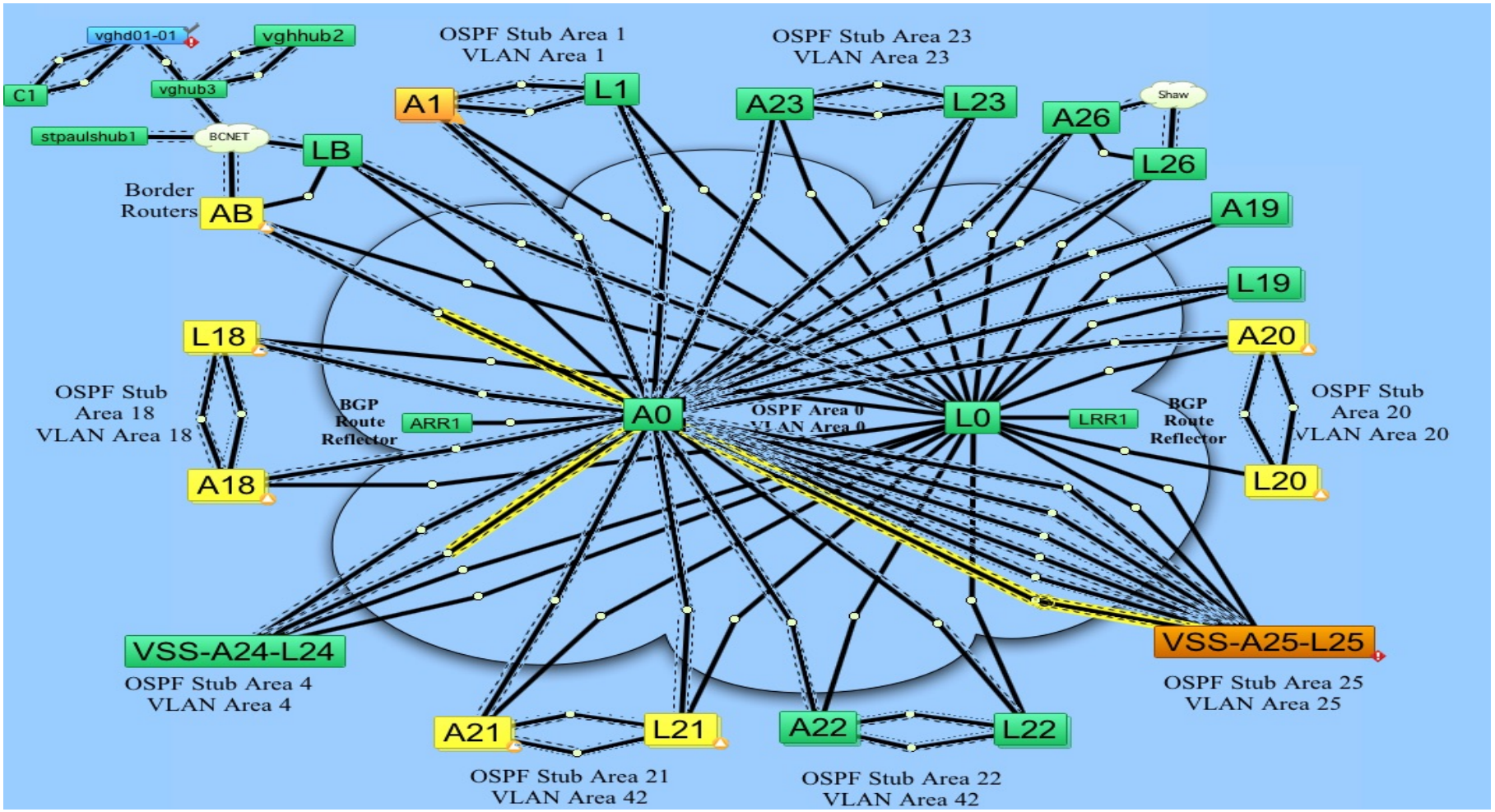

Logical topology – campus to campus

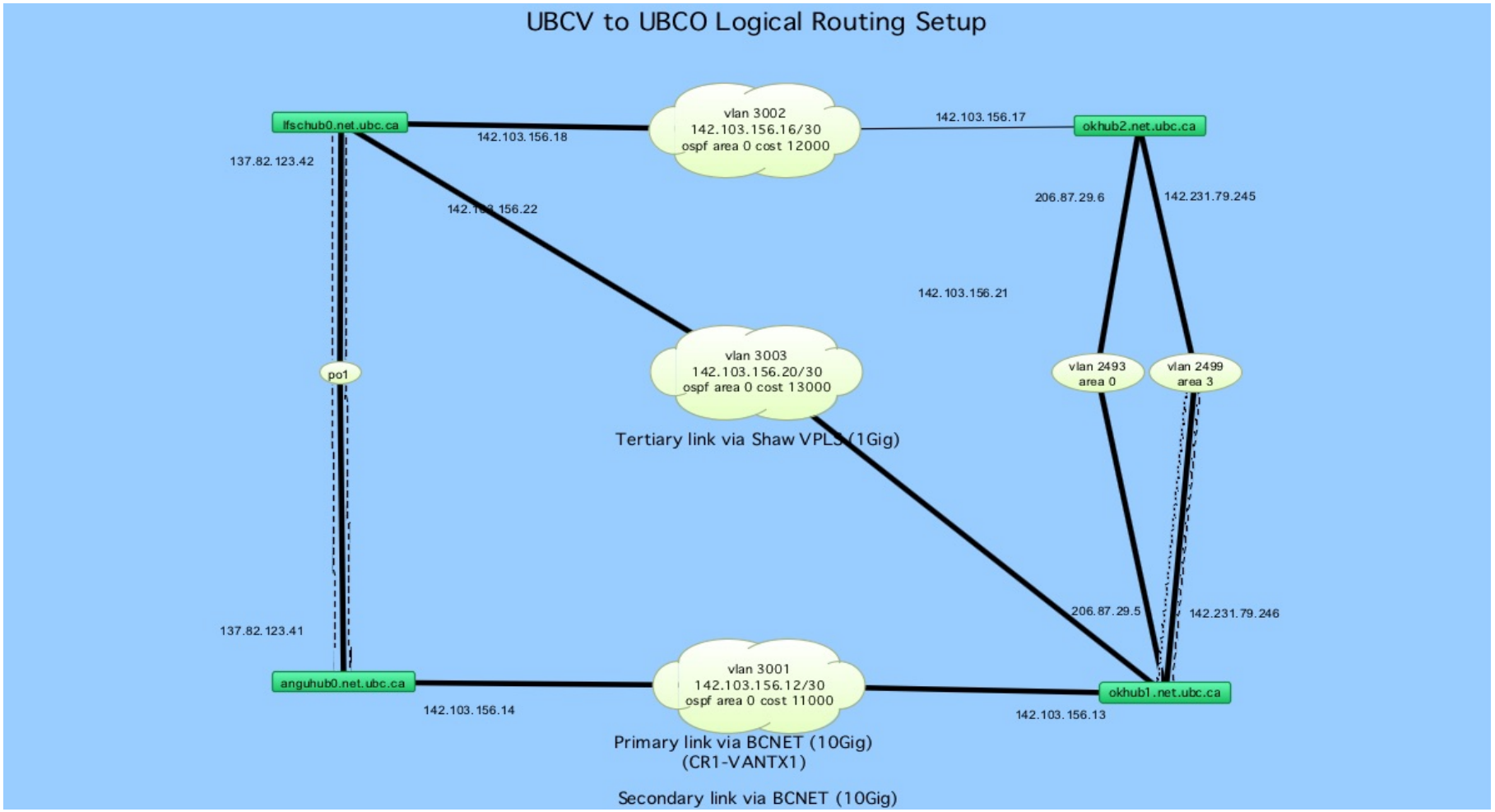

Current physical core

- primary 10G, secondary 10G and tertiary 1G links
- UBCO packet shaper located at BCNET Kelowna Transit Exchange
- border ingress filters for SMB block and black listed IP addresses

Current physical core

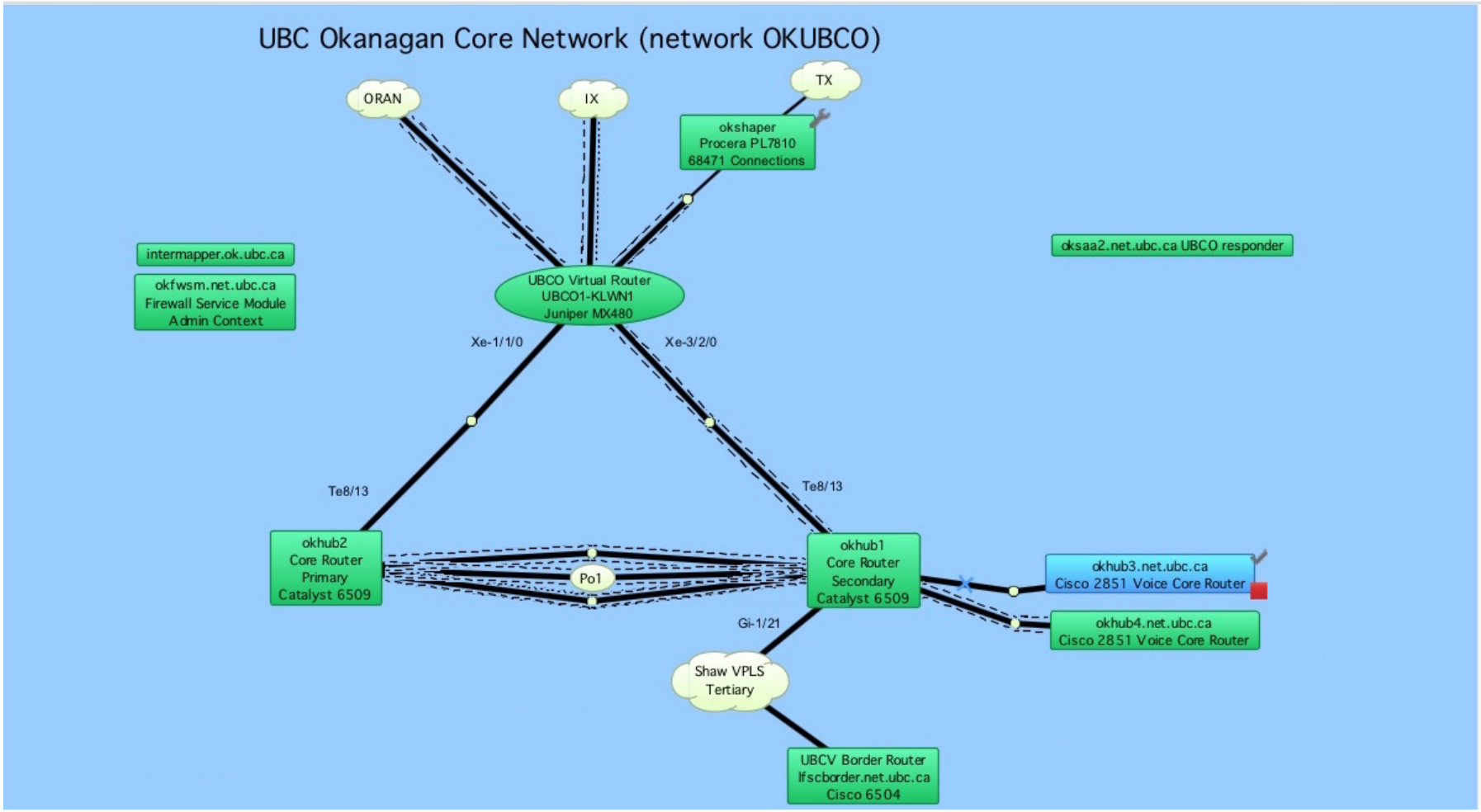

Fibre infrastructure

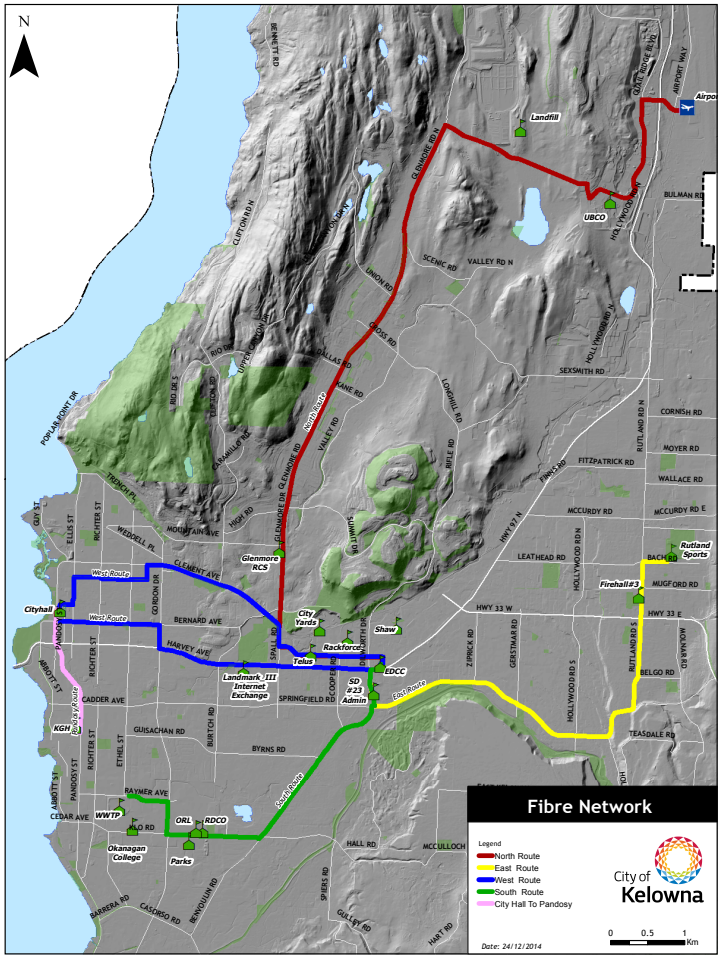

BCNET
Conference 2016

Future state

- new core in 3 months (Cisco Virtual Switching System – VSS)
- redundant fibre path to campus within 1 year
- move tertiary link to Kelowna Transit Exchange

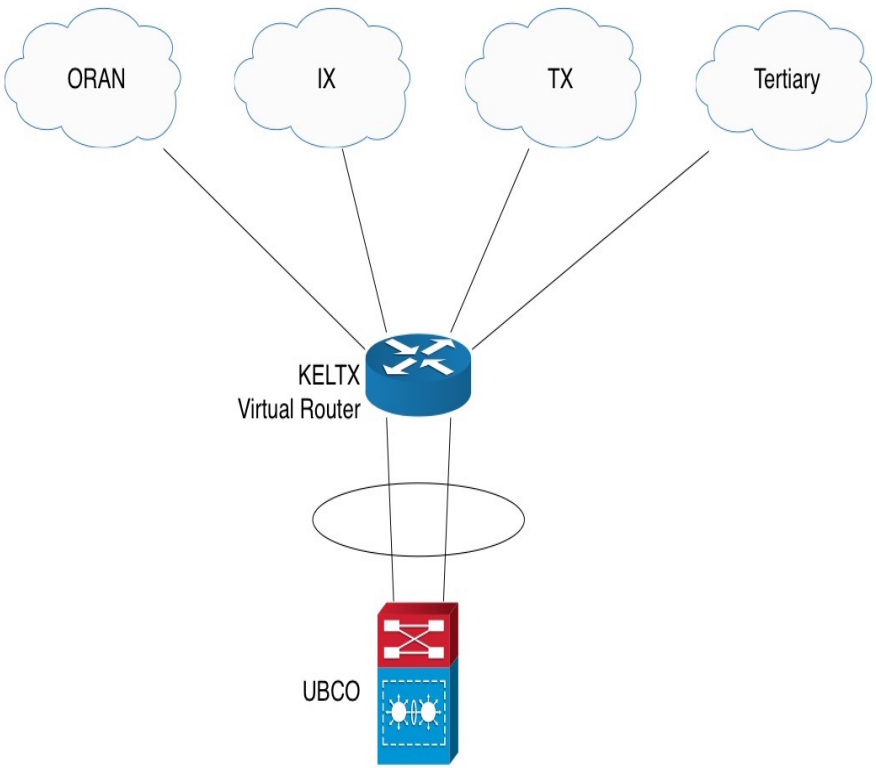

UNIVERSITY OF THE FRASER VALLEY

BCNET
Conference 2016

Overall design

- University of the Fraser Valley – Network Topolo

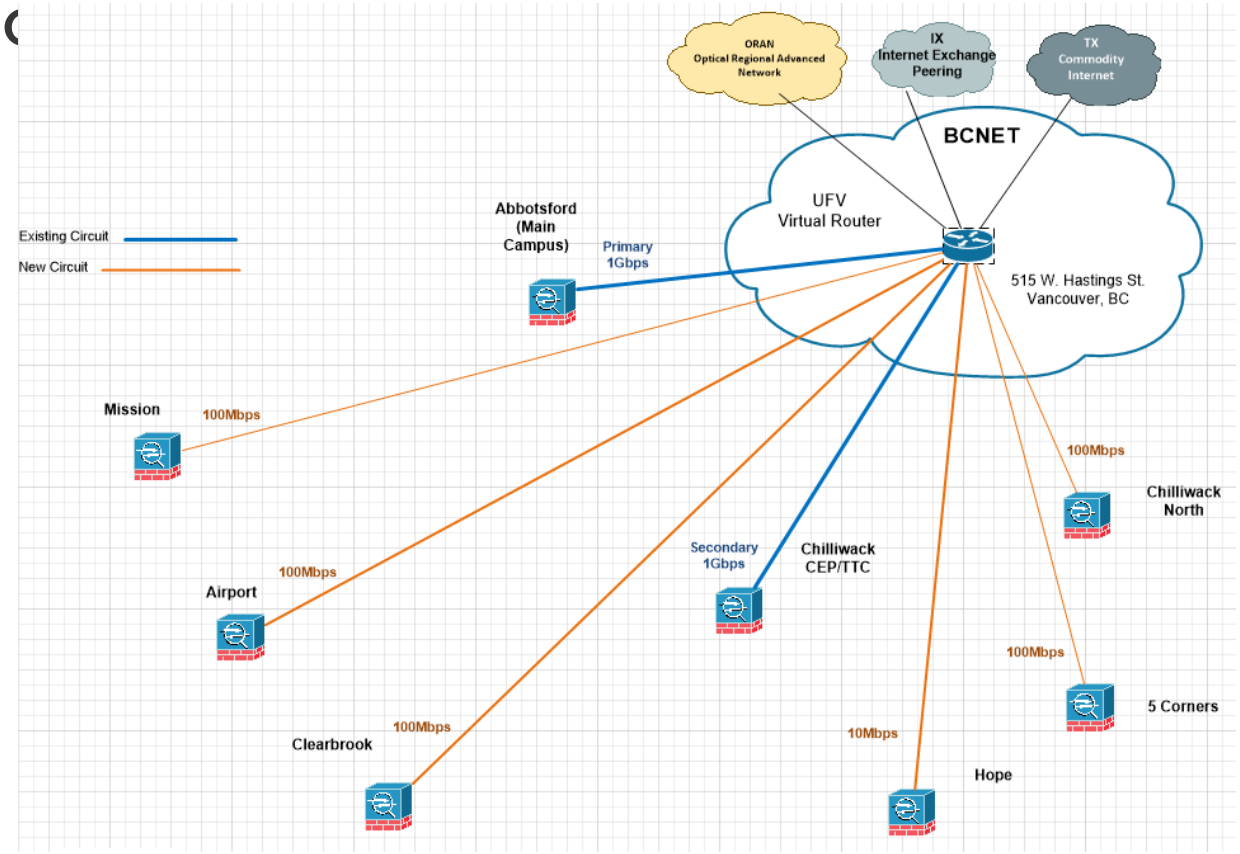

UFV to BCNET. Phase I.

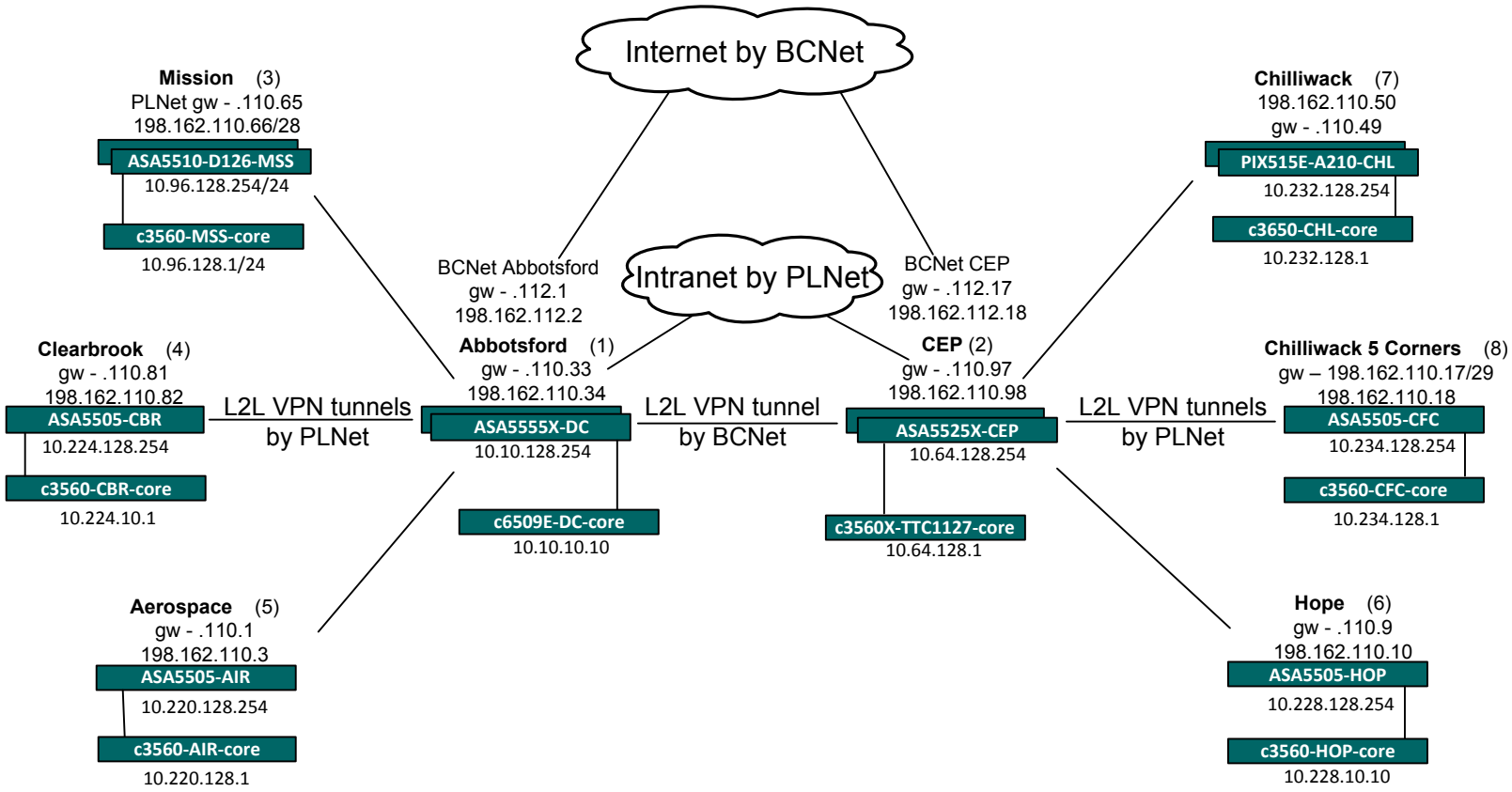

Physical topology. Phase II.

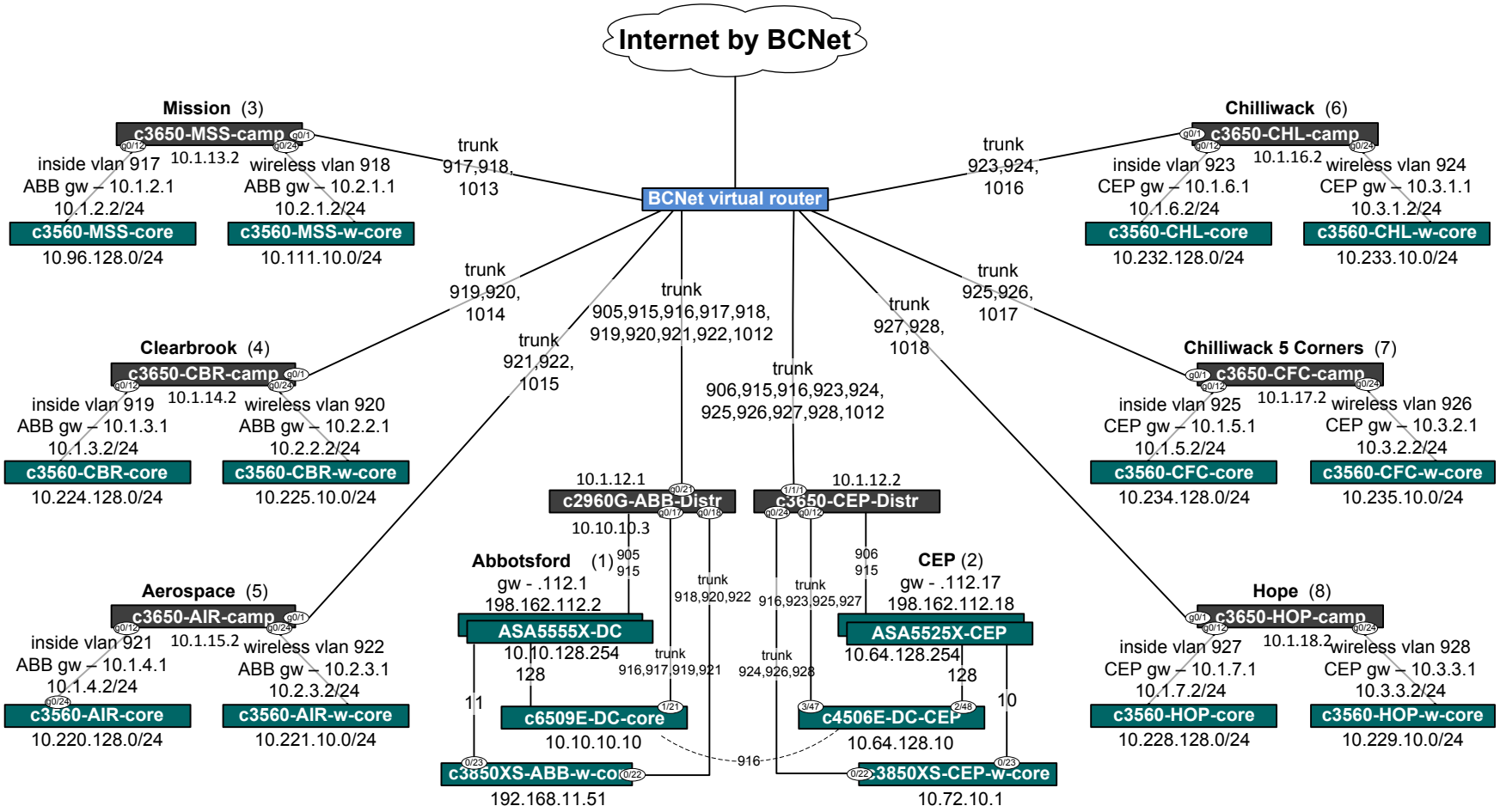

Logical topology

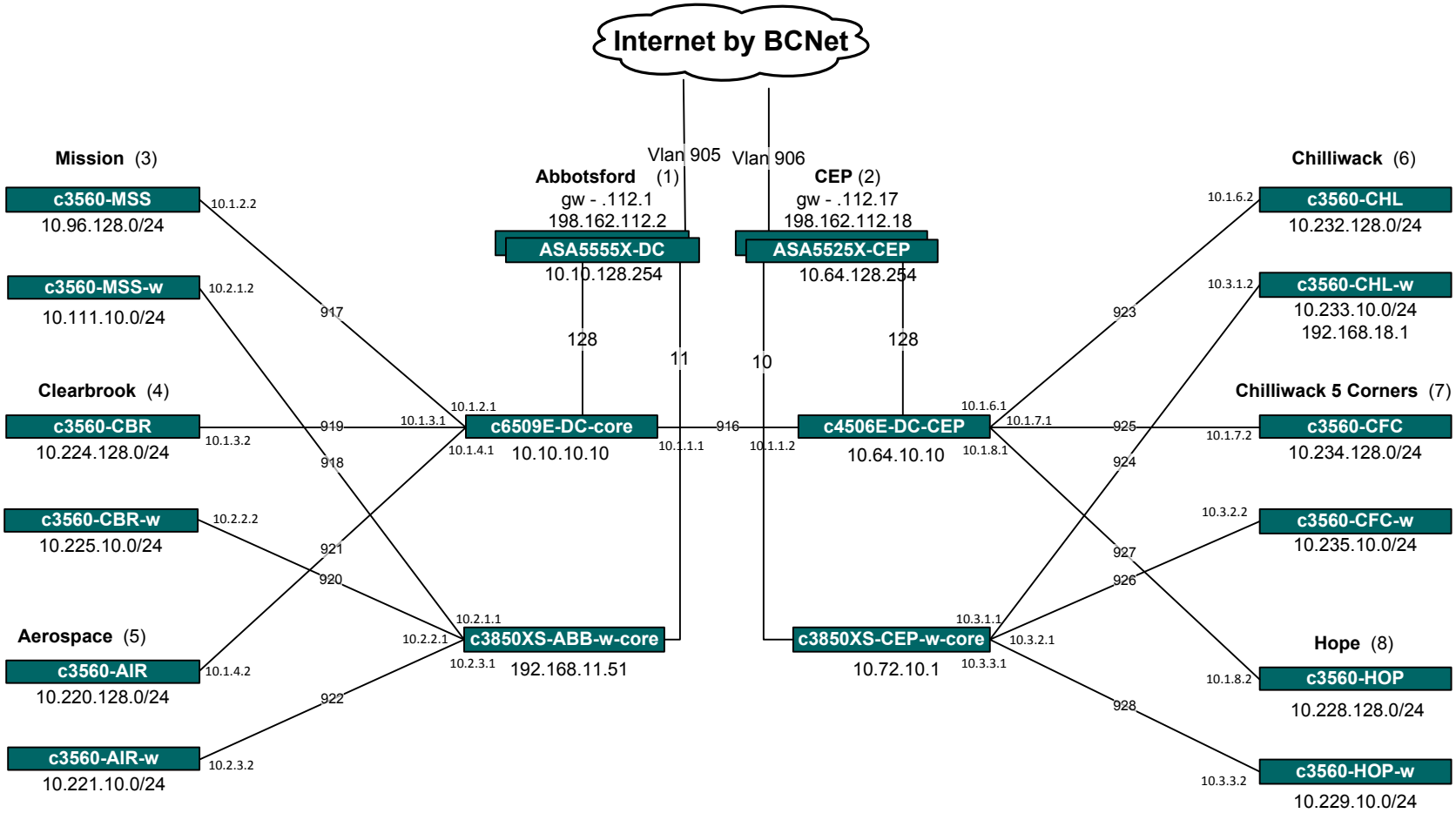

BCNET Conference 2016

KWANTLEN POLYTECHNIC UNIVERSITY

BCNET
Conference 2016

Overall design - goals

- Moving from PLNet to BCNET
- Limited resources
  - Concurrent network infrastructure upgrade
  - No in-house BGP expertise (PLNet managed routers)
  - Routers and firewalls for all four campuses = $$$
- VR service allowed us to move over with low cost and minimal architectural changes for now, will allow us to grow and improve future service

PLNet topology

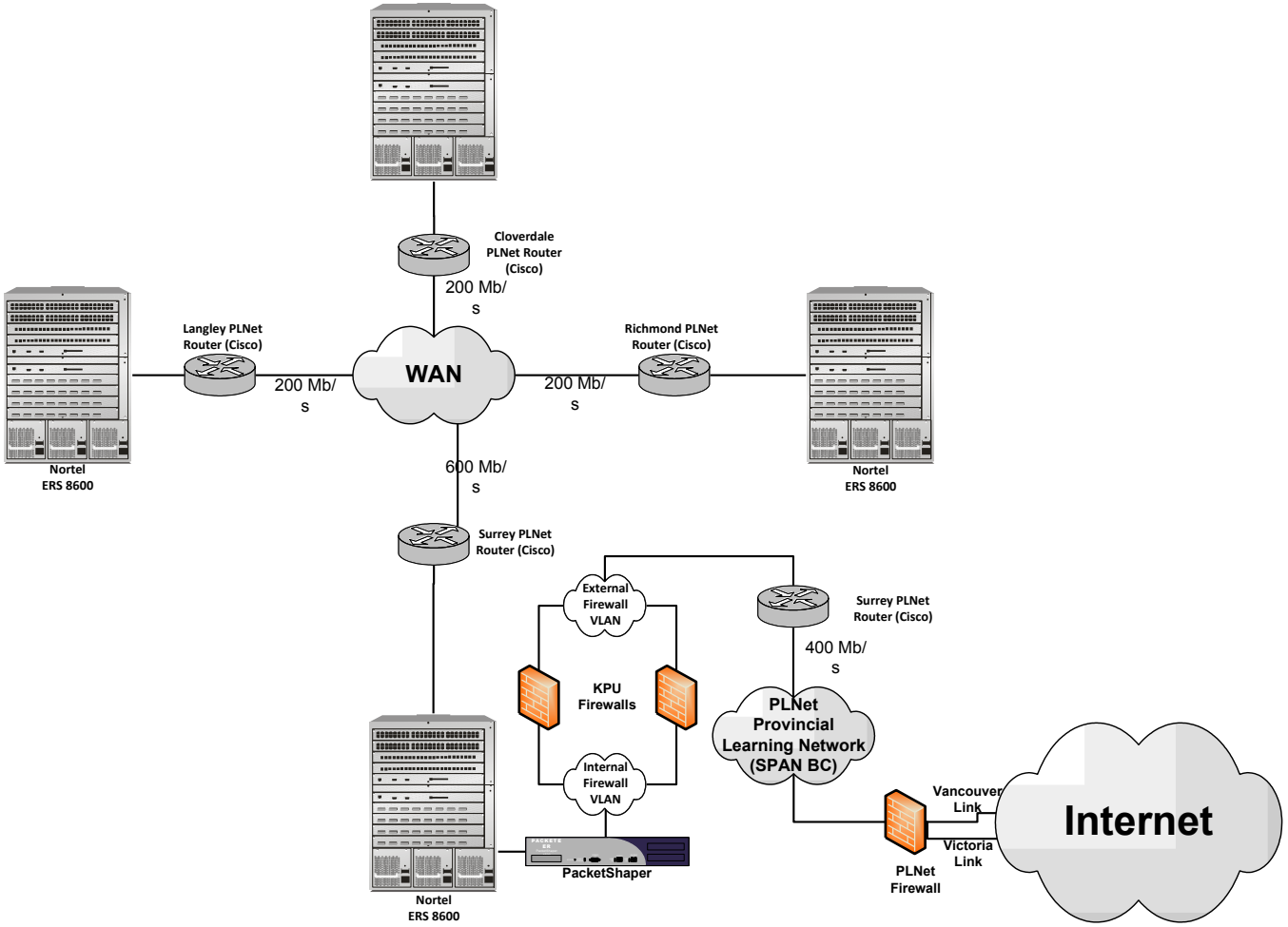

BCNET - Logical topology

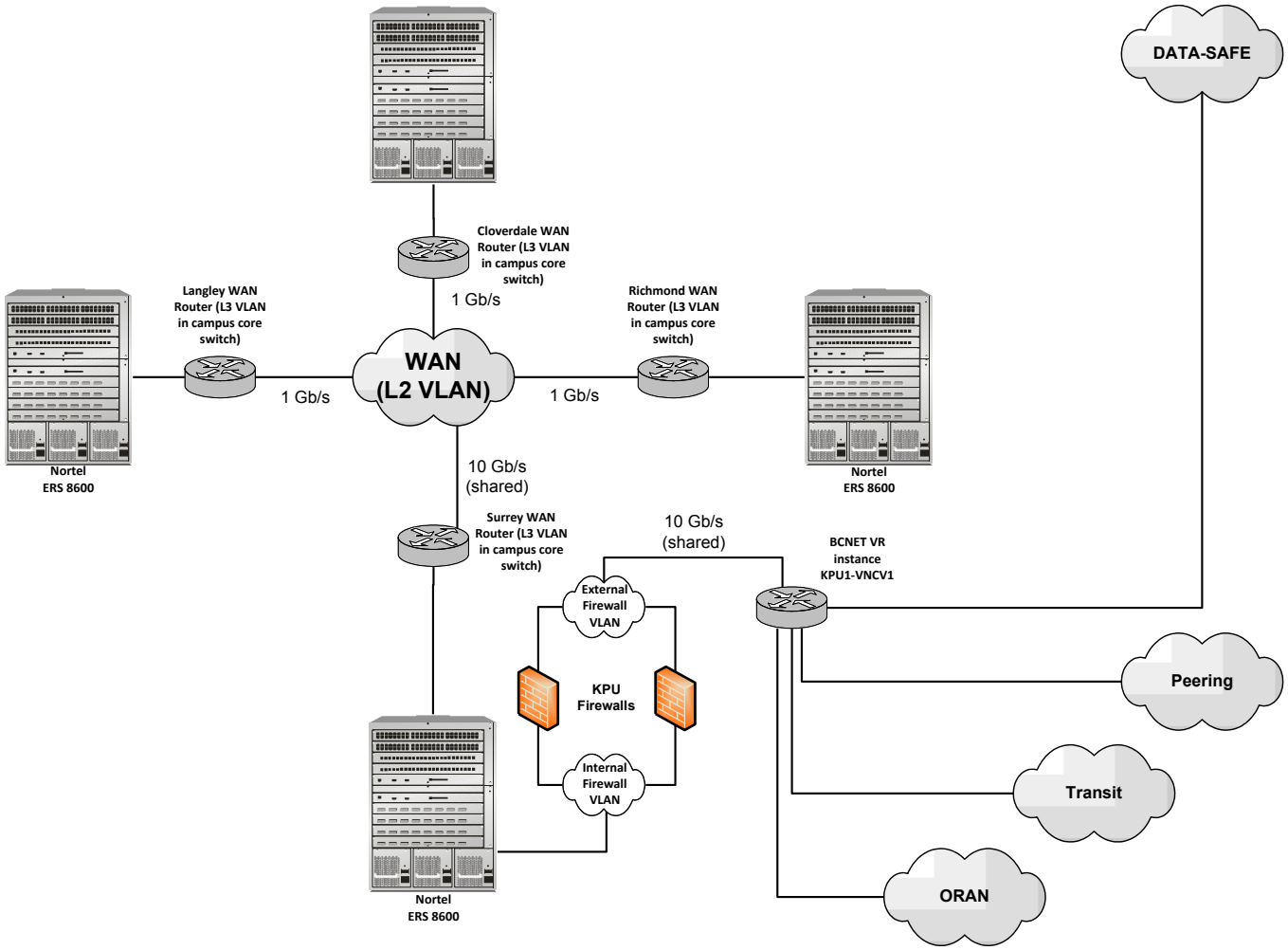

BCNET - Physical topology

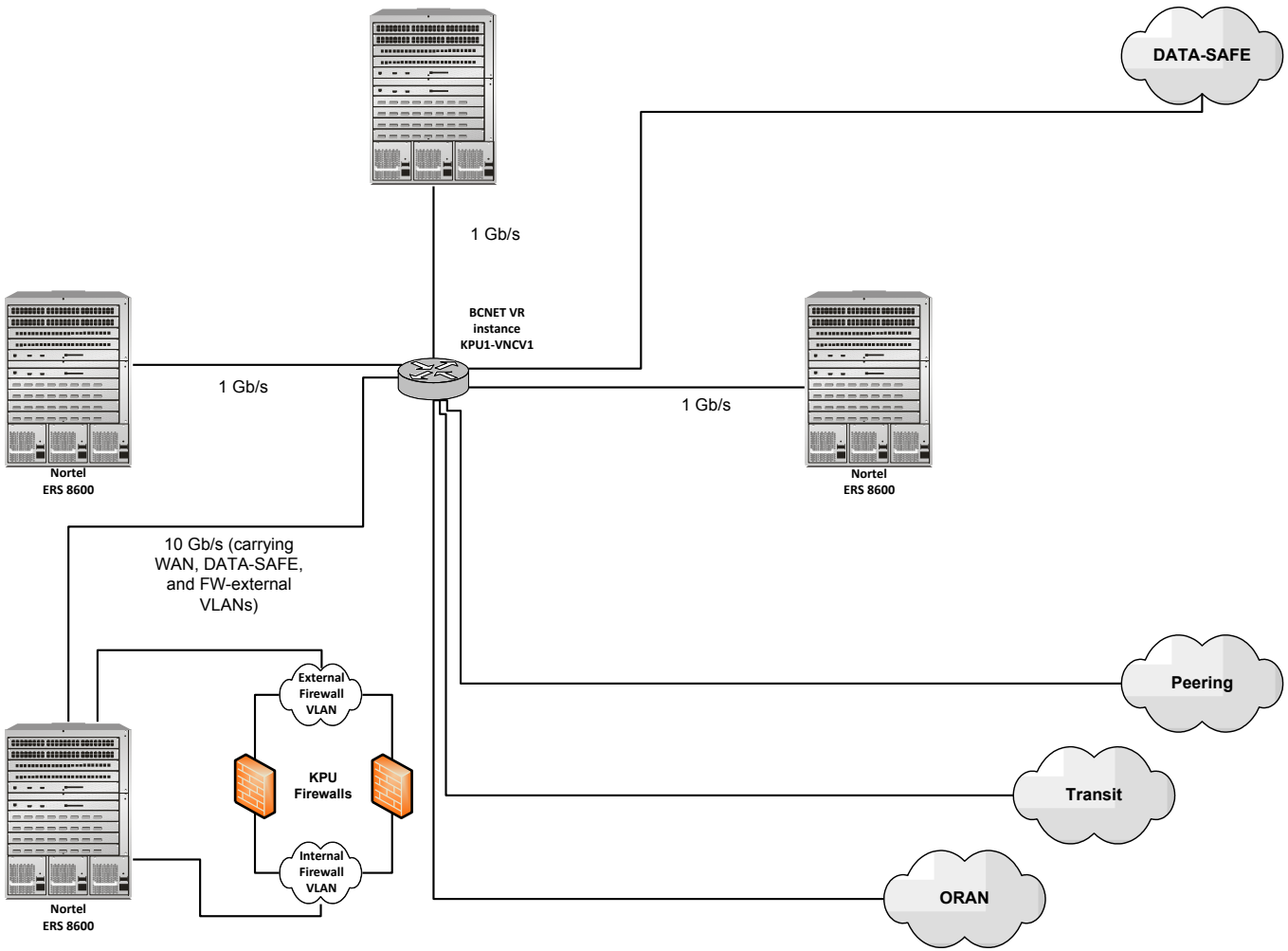

Future Plans

- Colocate border firewalls within HC building
  - Surrey Campus link is currently single point of failure
  - Can redirect services to DR servers in EduCloud
- Provision additional WAN VLANs to interconnect equivalent security zones at each campus
  - Allows inter-server traffic between campuses to avoid passing through two internal firewalls along the way
- Eventual plans for dark fibre, possibly retain current links for backup

Q + A

Contacts

Toby Wong
e: toby.wong@bc.net
t: 604.827.3962

Steve Rosco
e: steve.rosco@ubc.ca
t: 250.317.0240

Jim Anderson
e: jim.anderson@kpu.ca
t: 604.599.2248

Alexander Naumov
e: alexander.naumov@ufv.ca
t: 604.851.6360